SENSYS®
Magnetometers & Survey Solutions

Large Area Magnetometer Survey System

MAGNETO® MX V3

Scan me

Features

- Modular trailer to host 1 to 16 Magnetometer probes; to be carried, pushed or pulled
- 24Bit digitizer with LAN output
- 200Hz sample rate
- Rugged tablet PC for planning, recording and storage survey data
- RTK DGPS for position accuracy of ±1 cm
- SENSYS software suitable to record and process all data
- 25 ha max. daily cover.
- 15 km/h (9 mph) max. survey speed

The MAGNETO® MX V3 is a large area magnetometer survey system. It can host up to 16 fluxgate gradiometers on a trailer having a width of 3.85 m. This allows a rapid non-invasive cartography on land in order to search for UXO or archaeological structures as well as doing large scale soil evaluations. One of the unique features is the set up of various trailer config. to be carried, pushed or pulled. The survey width can be adjusted from 1 to 4 m.

Furthermore, the compact data acquisition unit offers high sampling rates, 24Bit digitizing of all measurement data and an Ethernet interface to output the data.
At the maximum survey speed the system is capturing data every 20 mm. In order to reach a positioning accuracy of ±1 cm, the MX V3 is equipped with a RTK DGPS. The GPS rover station is mounted to the car while the GPS base station (reference point) is set next to the measurement area.

+49 33631 59 650
info@sensys.de
www.sensys.de

Technical Data MAGNETO® MX V3

General Technical Data

Power Supply	12 V battery pack (lead gel)
Data acquisition	
Analog input	16 channel max.
Output	Proprietary MonMX protocol
Position accuracy	±1 cm (with RTK DGPS)
PC interface	LAN, 100Mbit/s
Carrier	
Lengths	min. 1.2 m (pushed) / max. 4.50 m (towed)
Width	min. 1.25 m, max. 3.85 m
Height (incl. GPS antenna)	ca. 1.3 m
Weight (net)	45kg
Sensors	
FGM650/10	±10,000 nT meas. range / 0.5V/µT sensitivity (see sensor spec sheet)
FGM650/3	±8,000 nT meas. range / 0.6V/µT sensitivity (see sensor spec sheet)
Measurement configuration	
Distance between probes	25 cm min.
Sensor above ground level	10 cm to 40 cm
Maximum survey speed	15 km/h; 9 mph
Data density (y) at max survey speed	20 mm

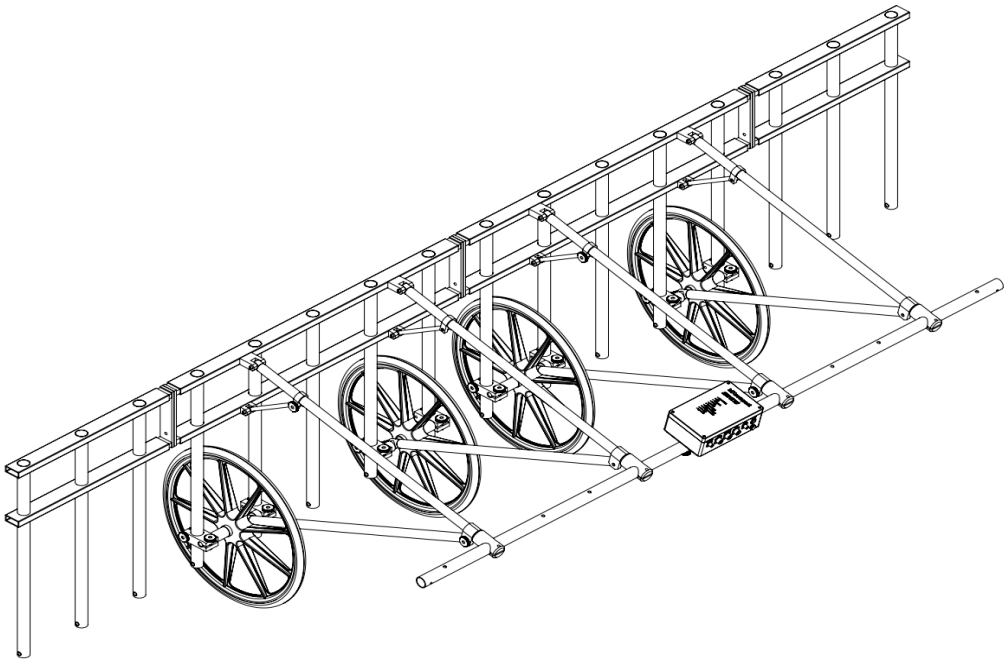

+49 33631 59 650
info@sensys.de
www.sensys.de